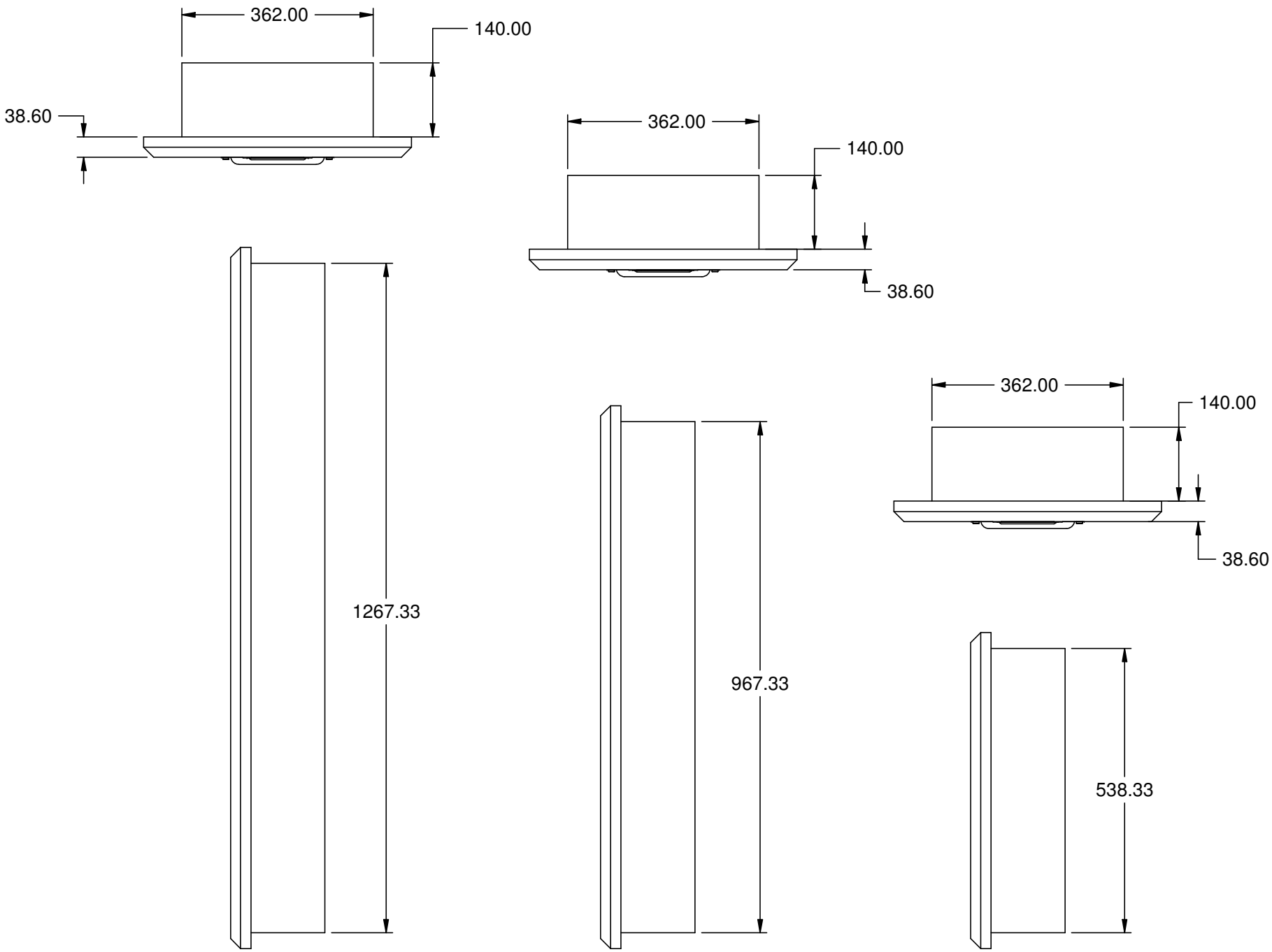
362.00
140.00
38.60
362.00
140.00
38.60
362.00
140.00
38.60
1267.33
967.33
538.33

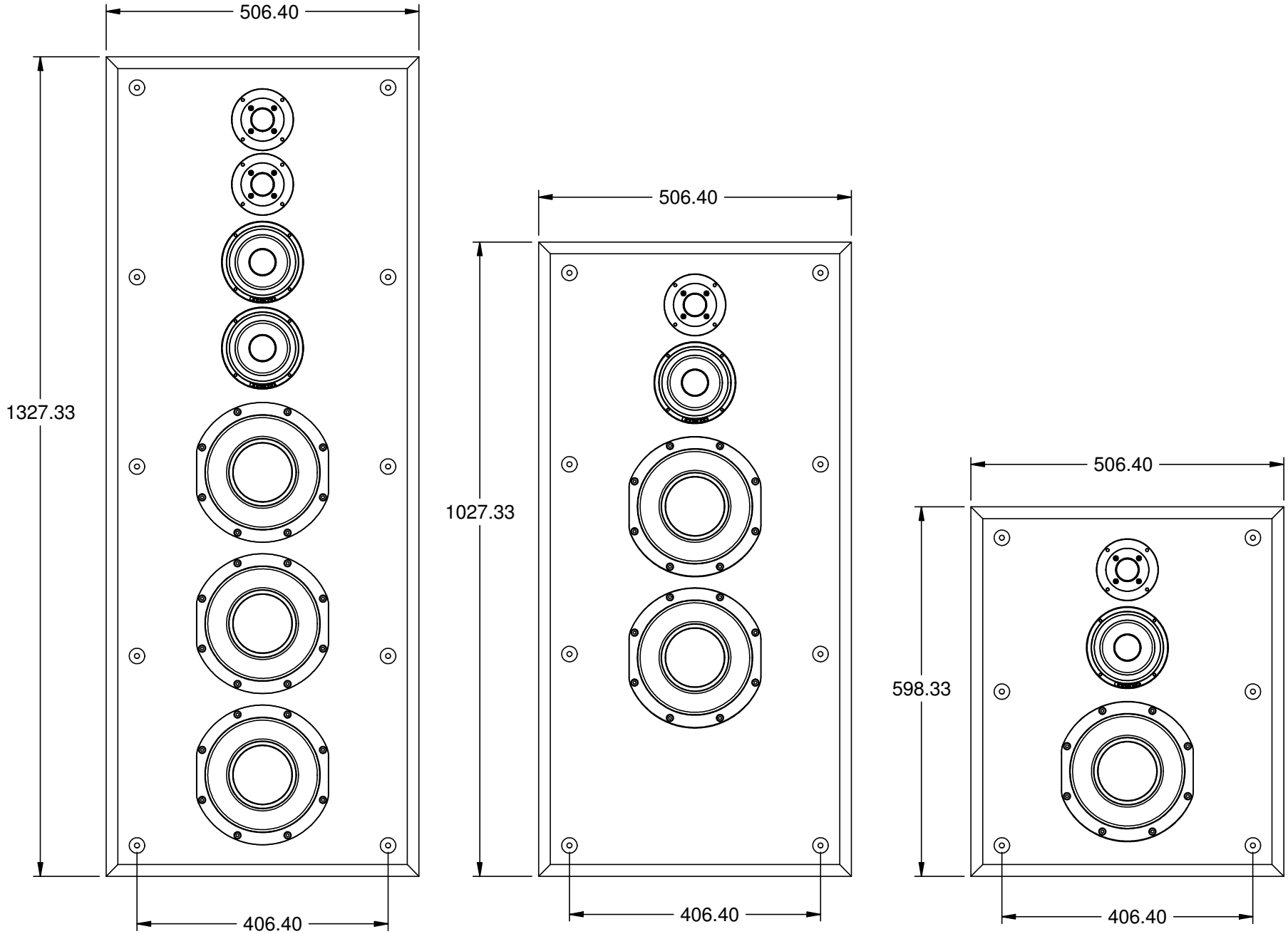
506.40
1327.33
406.40
506.40
1027.33
406.40
506.40
598.33
406.40